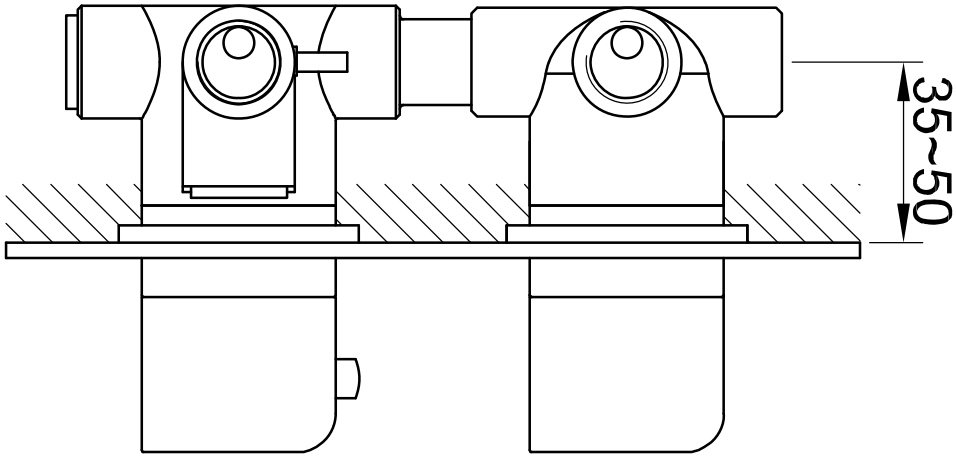
35~50

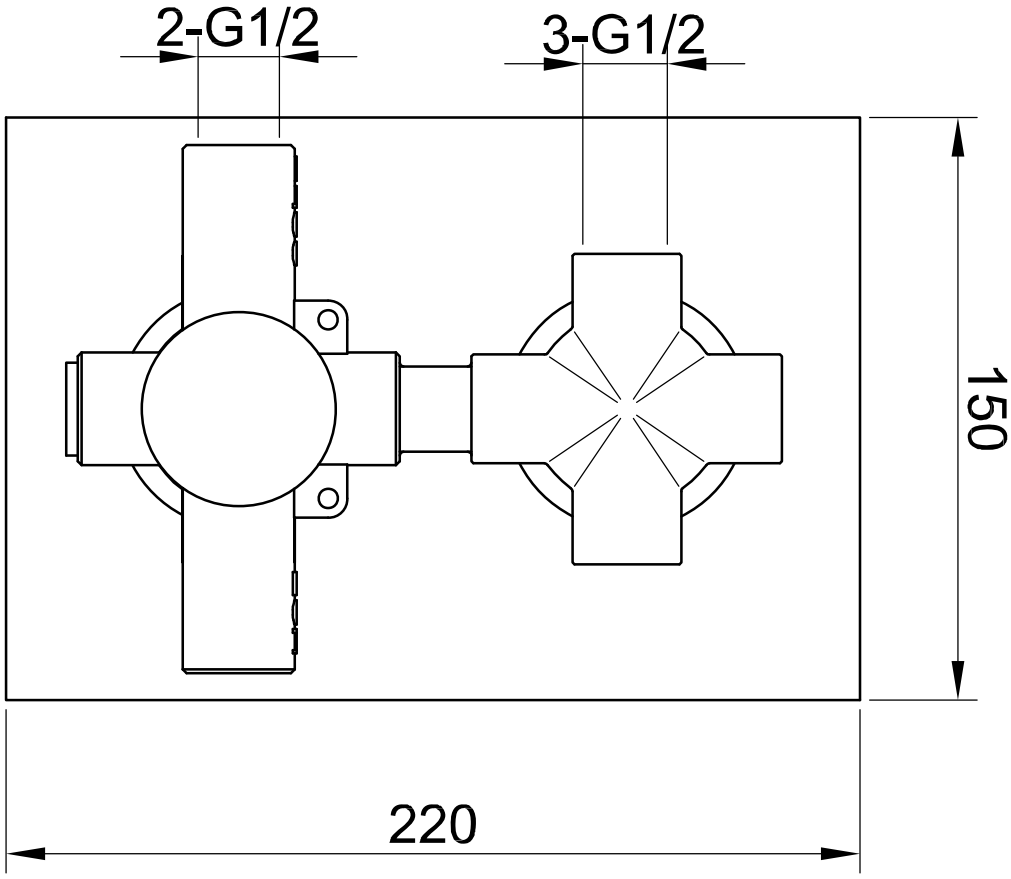
2-G1/2
3-G1/2
150
220